COYOTE Outdoor Living

42" GAS GRILL

S-SERIES

Model No. C2SL42

Features:

- Four high performance Coyote Infinity Burners™
- One infrared rear burner
- One Coyote RapidSear™ infrared burner
- 1275 sq. in. cooking area
- Up to 110,000 BTU
- Complete 304 stainless steel construction
- Ceramic Flavorizers
- Interior grill lighting
- LED illuminated knobs
- Rotisserie kit and smoker box included
- Integrated wind guard

Dimensions:

- Cutout: (H) 10 1/4" X (W) 39 1/2 X (D) 20 1/2"
- Overall: (H) 23" X (W) 42" X (D) 25 1/2"

Accessories:

- Laser-Cut Signature Grates (CSIGRATE15)
- Charcoal trays (CCHTRAY15)
- 14" stainless steel griddle (C1GRDL)
- Stainless steel cart available (C142CT)
- Custom fit, weather resistant cover
- Insulated jacket
- Gas conversion kit

C2SL42 PRODUCT SPECS

DIMENSIONAL RENDERINGS

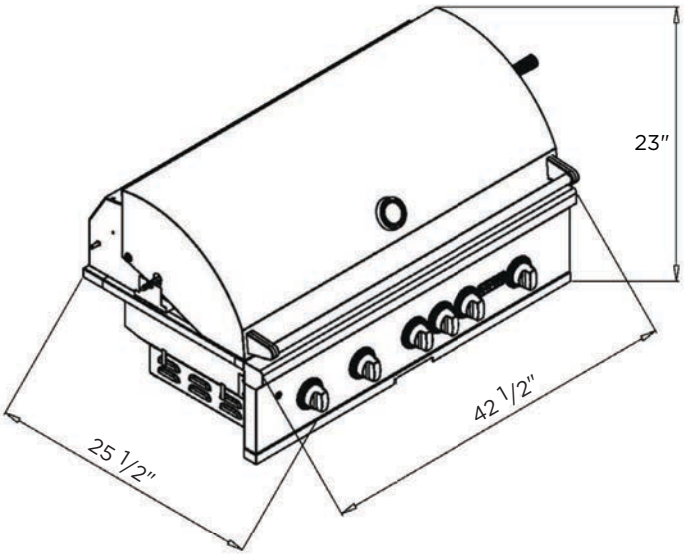

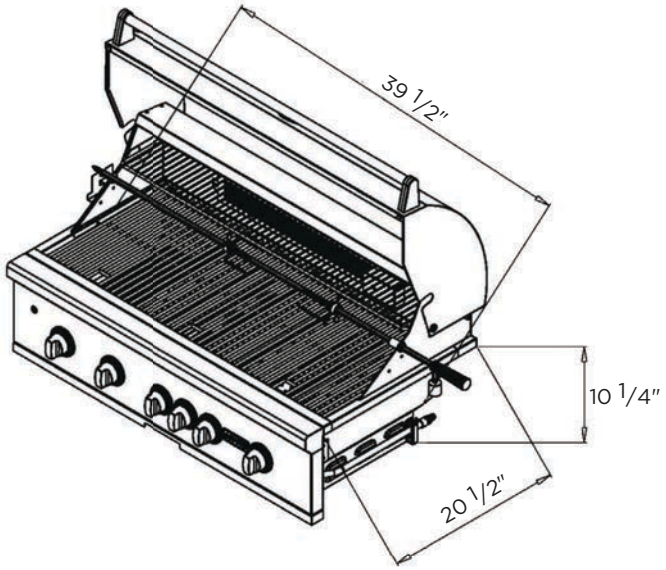

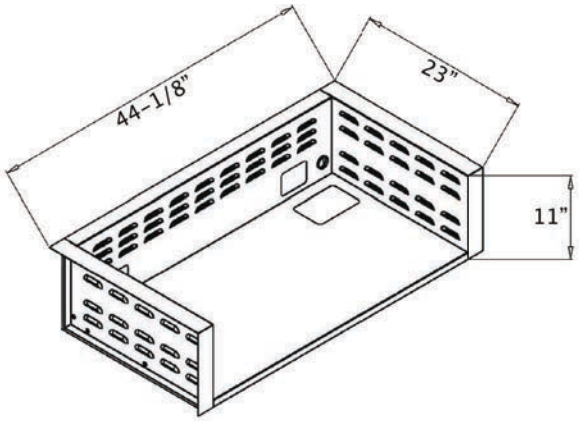

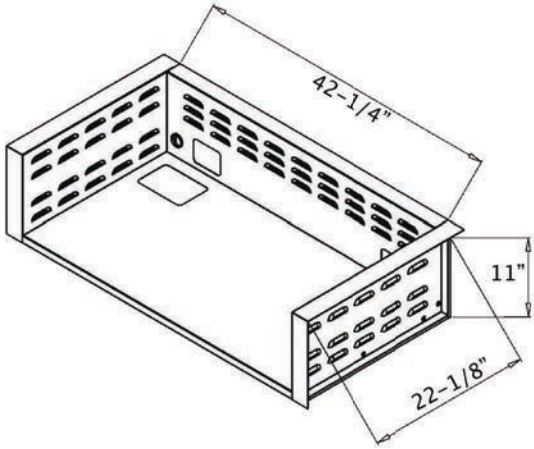

Overall Product Dimensions			
Model No.	Height	Width	Depth
C2SL42	23"	42 1/2"	25 1/2"
CJAKTCS42	11"	44 1/8"	23"

Cutout Dimensions for Island			
Model No.	Height	Width	Depth
C2SL42	10 1/4"	39 1/2"	20 1/2"
CJAKTCS42	11"	42 1/4"	22 1/8"

✓ *When using a Coyote insulated jacket, you will want to build your island to the jackets Cutout and Overall Dimensions listed above. Once the jacket is installed, the grill will rest on/inside the insulated jacket*

Model No.	*Gas Supply*	*BTU's*	*Regulator*	*WC Pressure*	*Max PSI*	*Electrical Requirements*
C2SL42LP	Propane	110,000	20 lb Tank Regulator	11"	.5 PSI	Qty 1 - 120 VAC 60 Hz Grounded Plug
C2SL42NG	Natural Gas	110,000	1/2" Female Pipe	4"	.5 PSI	Qty 1 - 120 VAC 60 Hz Grounded Plug

Important Note to Installer: *This file is not intended to replace your Owners' Manual which contains specific safety requirements and consumer guidelines. Please refer to your Owners' Manual prior to installing or operating your built-in grill.*