CPF30UGMX

Cooker size	30''X25''
N. of cavities with energy label	1
Hob type	Gas
Type of main oven	Thermo-ventilated
EAN code	8017709256449

Aesthetics

Aesthetics	Portofino	**No. of controls**	7
Colour	Stainless steel	**Serigraphy colour**	Black
Design	Flush fit	**Handle**	Smeg Portofino
Door	With frame	**Handle Colour**	Brushed stainless steel
Upstand	Yes	**Glass type**	Grey
Type of pan stands	Cast Iron	**Feet**	Stainless steel
Hob colour	Stainless steel	**Plinth**	Black
Command panel finish	Finger friendly stainless steel	**Storage compartment**	Door
		Logo	Assembled st/steel
Control knobs	Smeg Portofino	**Logo position**	Facia below the oven
Controls colour	Stainless steel	**Alternative colours available**	Black, White, Red, Olive green, Yellow, Orange
Display	Touch		

Programme / Functions

No. of cooking functions 9

Traditional cooking functions

- Static
- Fan assisted
- Circulaire
- Small grill
- Large grill
- Fan grill (large)
- Base
- Fan assisted base
- Pizza

Other functions

Defrost by time

Hob technical features

UR UR

Total no. of cook zones 4

Gas - 2UR (dual) - 5.80 kW

Gas - Semi Rapid - 2.30 kW

Gas - AUX - 1.30 kW

Gas - UR - 5.80 kW

Type of gas burners	Standard	**Gas safety valves**	Yes
Automatic electronic ignition	Yes	**Burner caps**	Matt black enamelled

Main Oven Technical Features

No. of lights	2	**Total no. of door glasses**	3
Fan number	1	**No.of thermo-reflective door glasses**	2
Cavity material	Easy clean enamel	**Safety Thermostat**	Yes
No. of shelves	4	**Cooling system**	Tangential
Type of shelves	Metal racks	**Usable cavity space dimensions (HxWxD)**	340 x 640 x 430 mm
Light type	Halogen	**Temperature control**	Electro-mechanical
Light power	40 W	**Lower heating element power**	1700 W
Cooking time setting	Start and Stop	**Upper heating element - Power**	1200 W
Light when oven door is open	Yes	**Grill elememt**	1700 W
Door opening	Flap down	**Large grill - Power**	2900 W
Removable door	Yes	**Circular heating element - Power**	2700 W
Full glass inner door	Yes	**Grill type**	Electric
Removable inner door	Yes	**Soft Close system**	Yes

Options Main Oven

Timer	Yes	**Minimum Temperature**	50 °C
End of cooking acoustic alarm	Yes	**Maximum temperature**	260 °C

Accessories included for Main Oven & Hob

Cast iron wok support	1	**Wide baking tray**	1
Oven grid with stop, tray support	1	**20mm deep tray**	1
Top oven chrome shelf with back stop	1	**Telescopic Guide rails, partial Extraction**	1
Grill mesh	1		

Electrical Connection

Nominal power	3700 W	**Frequency**	60 Hz
Voltage	120-240 V	**Power supply cable length**	120 cm
Voltage 2 (V)	120/208 V	**Terminal block**	5 poles

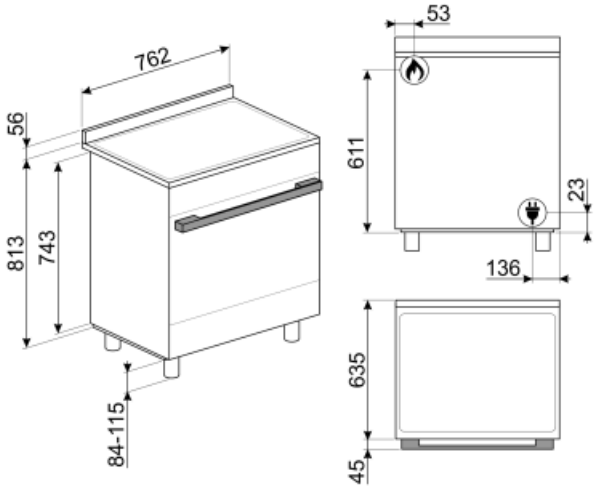

Not included accessories

PAL2

Paletta pizza larga con doppio manico.

SFLK1

Child lock

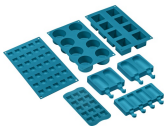

SMOLD

Set of 7 silicone moulds for ice creams, ice lollies, pralines, ice cubes or to portion food. Usable from -60°C to +230°C

Symbols glossary

Heavy duty cast iron pan stands: for maximum stability and strength.

Defrost by time: with this function the time of thawing of foods are determined automatically.

Enamel interior: The enamel interior of all Smeg ovens have a special antacid lining which helps keep the interior clean by reducing the amount of cooking grease adhering to it.

Circogas: In gas ovens the fan distributes the heat quickly and evenly throughout the oven cavity, avoiding flavour transfer when cooking a number of different dishes at the same time. In electric ovens this combination completes cooking more quickly of foods that are ready on the surface, but that require more cooking inside, without further browning.

Upper and lower element only: a traditional cooking method best suited for single items located in the centre of the oven. the top pf the oven will always be hottest. Ideal for roast, fruit cakes, bread etc.

Circulaire: The combination of the fan and circular element around it gives a hot air cooking method. This provides many benefits including no preheat if cook time is more than 20 minutes, no flavour transfer when cooking different foods at the same time, less energy, and shorter cook times. Good for all types of food.

Half grill: For rapid cooking and browning of foods. Best results can be obtained by using the top shelf for small items, the lower shelves for larger ones, such as chops or sausages. For half grill heat is generated only at the centre of the element, so is ideal for smaller quantities.

Pizza function: The simultaneous operation of three elements ensures an optimum cooking facility when used with the Smeg pizza stone.

The inner door glass: can be removed with a few quick movements for cleaning.

The oven cavity has 4 different cooking levels.

Air cooling system: to ensure a safe surface temperatures.

Triple glazed doors: Number of glazed doors.

Fingerprint proof stainless steel: Fingerprint proof stainless steel keeps stainless steel looking as good as new.

Fan with upper and lower elements: The elements combined with the fan aim to provide more uniform heat, a similar method to conventional cooking, so pre-heat is required. Most suitable for items requiring slow cooking methods.

Lower heating element only: This function is ideal for foods that require extra base temperature without browning, e.g. pastry dishes, pizza. Also suitable for slow cooking of stews and casseroles.

Grill element: Using of grill gives excellent results when cooking meat of medium and small portions, especially when combined with a rotisserie (where possible). Also ideal for cooking sausages and bacon.

Fan with grill element: The fan reduces the fierce heat from the grill, providing an excellent method of grilling various foods, chops, steaks, sausages etc. giving even browning and heat distribution, without drying out the food. The top two levels recommended for use, and the lower part of the oven can be used to keep items warm at the same time, an excellent facility when cooking a grilled breakfast. Half grill (centre portion only) is ideal for small quantities of food.

All glass inner door: All glass inner door, a single flat surface which is simple to keep clean.

Side lights: Two opposing side lights increase visibility inside the oven.

Soft close: all models are equipped with advanced function of smooth closing of the door, which allows the device to close smoothly and quietly.

Telescopic rails: allow you to pull out the dish and check it without having to remove it from the oven entirely.

UR

Ultra rapid burners: Powerful ultra rapid burners offer up to 5kw of power.